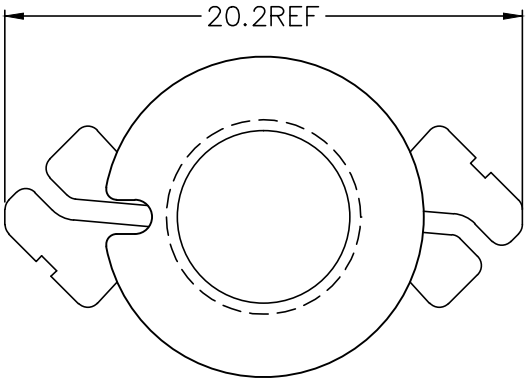

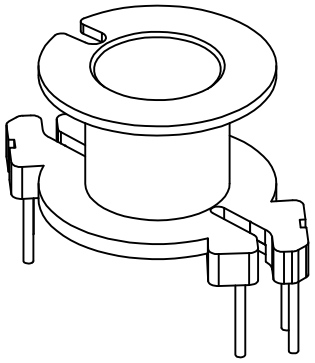

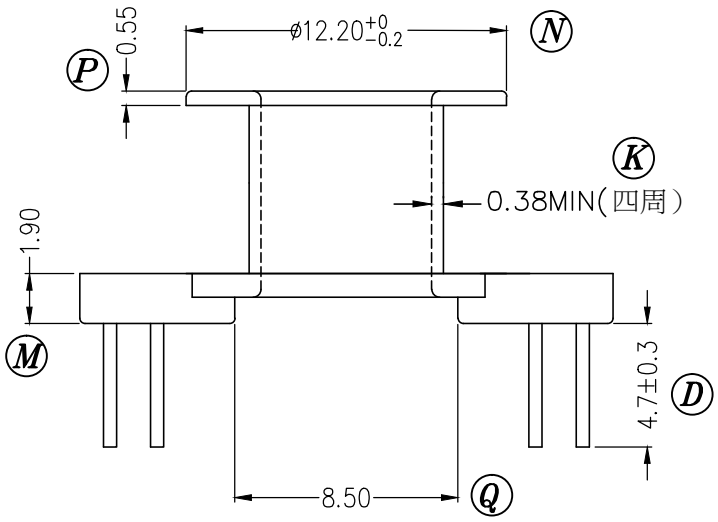

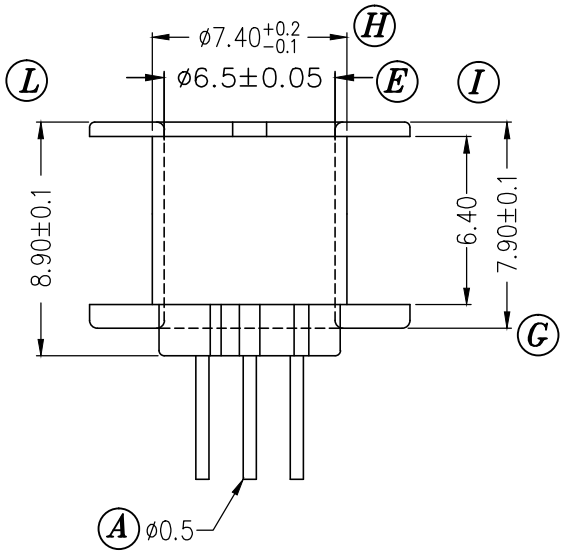

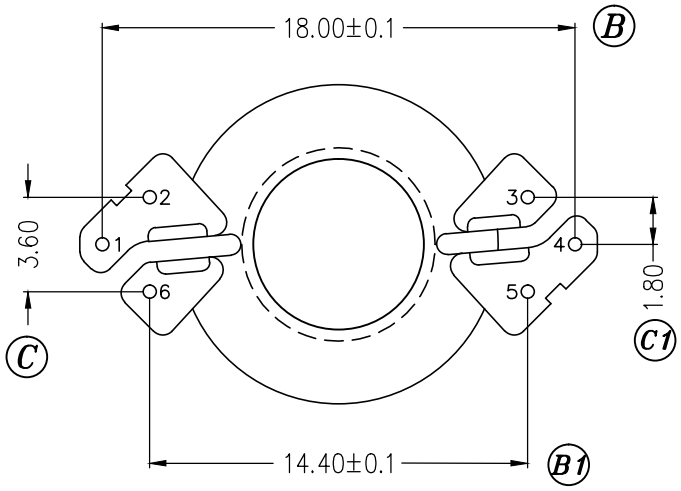

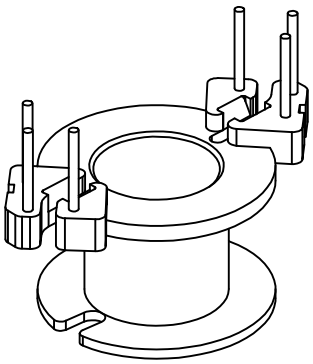

REV.	REVISIONS REC.	DATE	REV.	REVISIONS REC.	DATE
1	UPDATE THE DRAWING.	00.09.27			
2	(B):18.0->18.0±0.1;(B1):14.4->14.4±0.1; (G)7.90->7.90±0.1	04.03.16			
3	图框更换	18.07.17			

DRAWN & DRAFTED BY	王小雲	TOLERANCES	ANGLE: ±1°	TITLE: T-H BOBBIN RM-6	
CHECKED & APPROVED BY		0<L ≤4 ±0.1 4<L ≤16 ±0.2 16<L ≤63 ±0.3 pin pitch ±0.2	UNIT: MM	BOBBIN MATERIAL: PHENOLIC PM9630	UL REC. UL 94V-0
PIN SHINE INDUSTRIAL CO.,LTD. TEL:886-2-22990545 FAX:886-2-22990546			ORIGIN: ZZ	PIN MATERIAL: CP WIRE	PIN TENSION LOAD: 0.7kg MIN.
				DATE: JUL.17 2018 / DRAWING NO. P-604	REV. 3