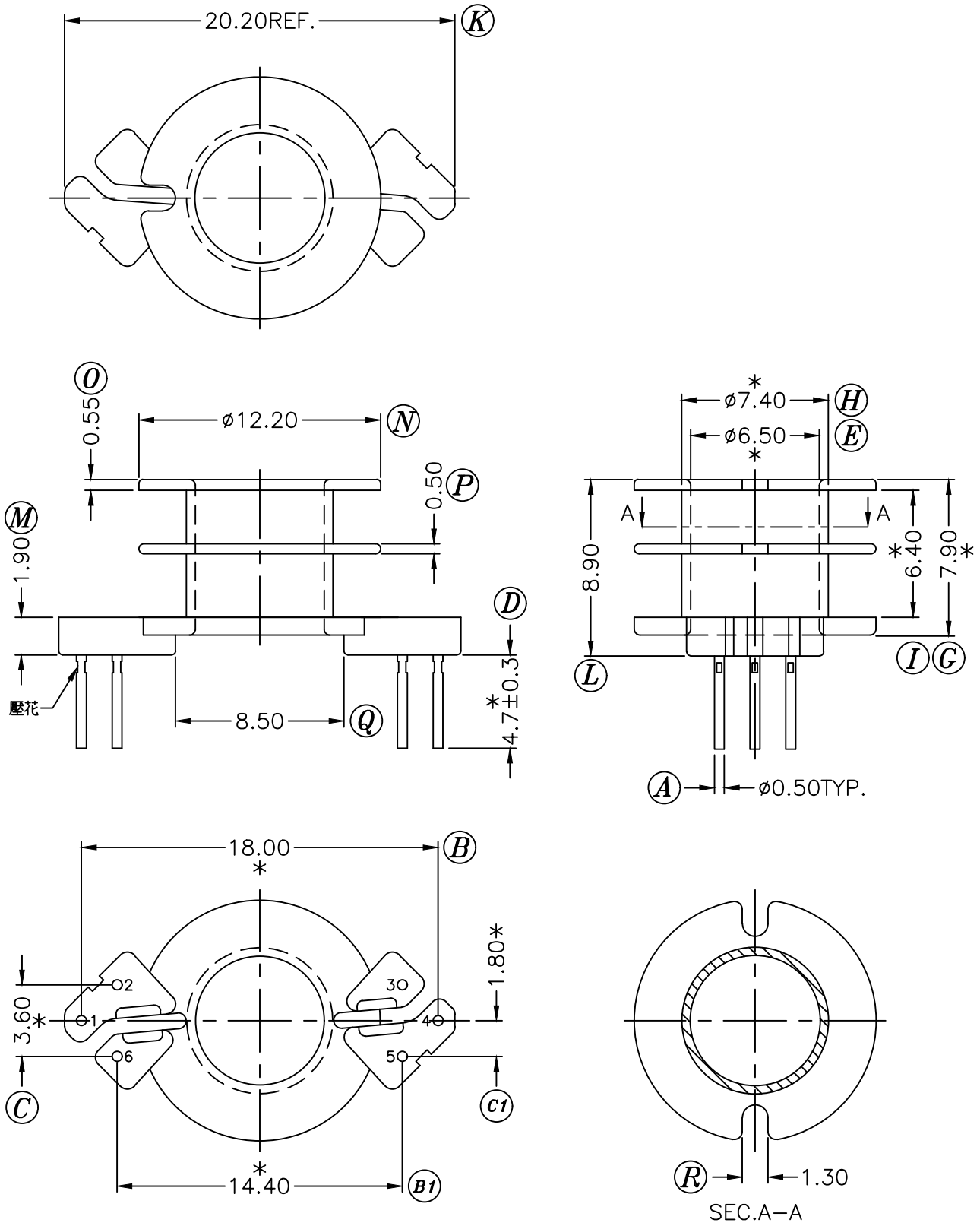

REV.	REVISIONS REC.	DATE	REV.	REVISIONS REC.	DATE
1	UPDATE THE DRAWING.	'00.09.27			

DRAWN & DRAFTED BY	ZHONG SHENG	TOLERANCES: 0<L≦4 ±0.1; 4<L≦16 ±0.2; 16<L≦63 ±0.3; pin pitch ±0.2	ANGLE: ±1°	TITLE: T-H BOBBIN RM-6	
CHECKED & APPROVED BY			UNIT: MM	BOBBIN MATERIAL: PHENOLIC PM9630	UL REC. UL 94V-0
PIN SHINE INDUSTRIAL CO.,LTD.			ORIGIN: DG SZ	PIN MATERIAL: CP WIRE	PIN TENSION LOAD: 0.7KG MIN
TEL:886-2-22990545	FAX:886-2-22990546			DATE: SEP.27 '2000	DRAWING NO. P-604-1 / REV. 1