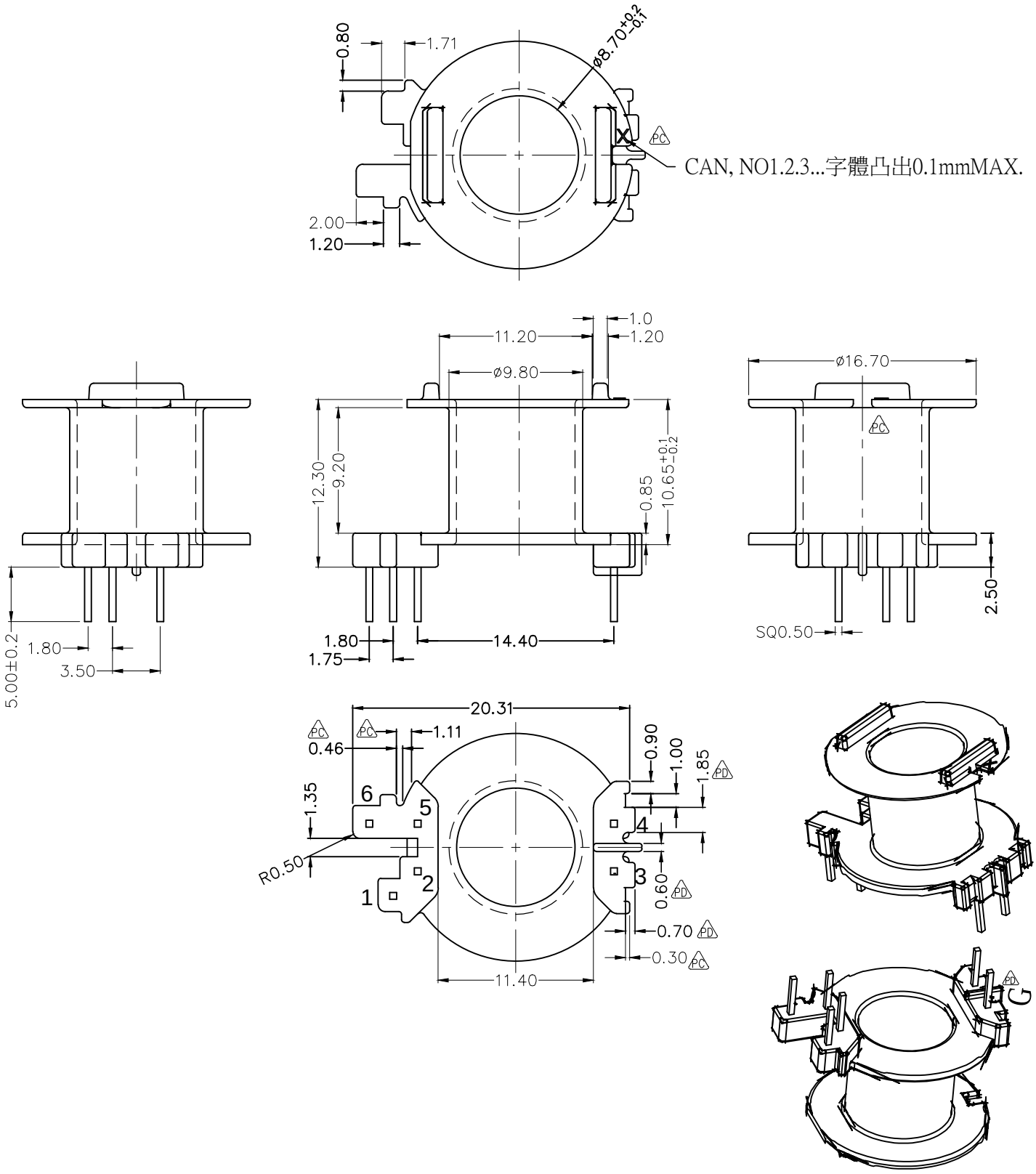

REV.	REVISIONS REC.	DATE	REV.	REVISIONS REC.	DATE
PA	新開模發行.	12.11.22	PD	變更PIN座結構.PD	14.03.17
PB	變更腳長4.0-->5.0.PB	12.11.28	PE	图框更换	18.07.20
PC	變更結構.PC	13.02.06			

DRAWN & DRAFTED BY	王 小 雲	TOLERANCES: 0<L≦4 ±0.1; 4<L≦16 ±0.2; 16<L≦63 ±0.3; pin pitch ±0.2	ANGLE: ±1°	TITLE: RM-08 BOBBIN	
CHECKED & APPROVED BY			UNIT: MM	BOBBIN MATERIAL: PM 9820	UL REC. UL 94V-0
PIN SHINE INDUSTRIAL CO.,LTD. TEL:886-2-22990545 FAX:886-2-22990546			ORIGIN: ZZ	PIN MATERIAL: CP WIRE 3/4H	PIN TENSION LOAD: 0.8KG MIN
				DATE: JUL.20.2018 / DRAWING NO. P-833	REV. PE