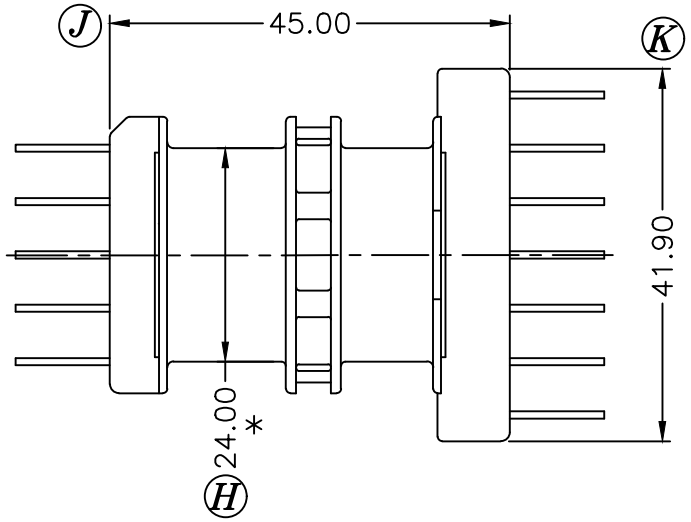

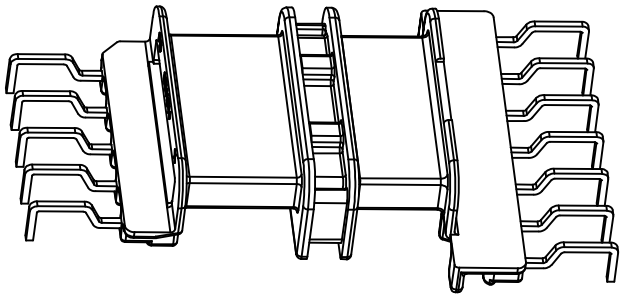

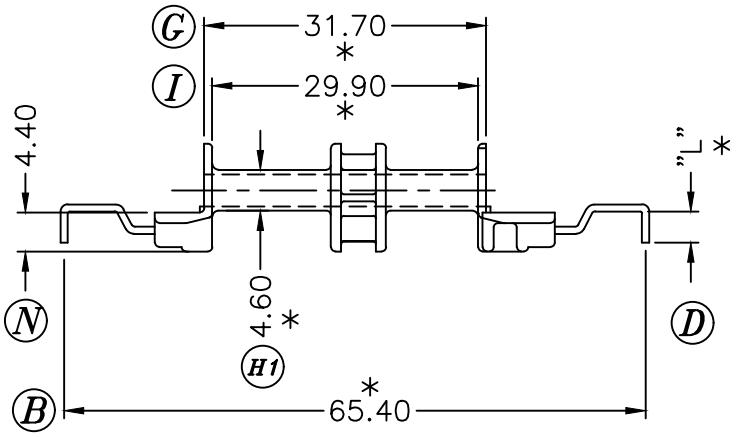

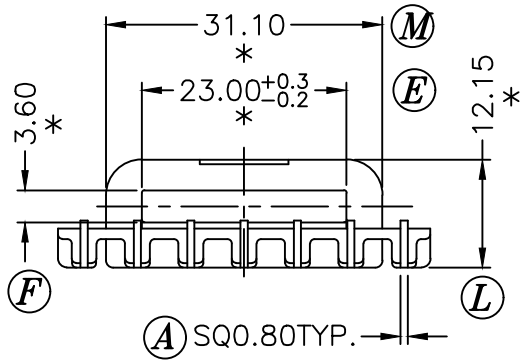

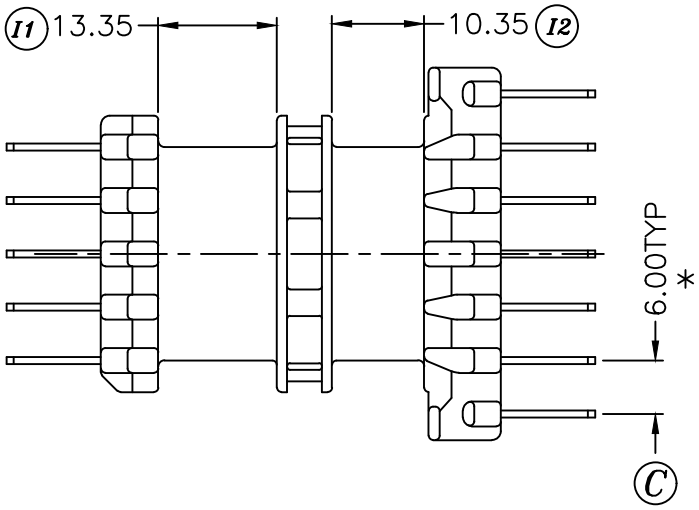

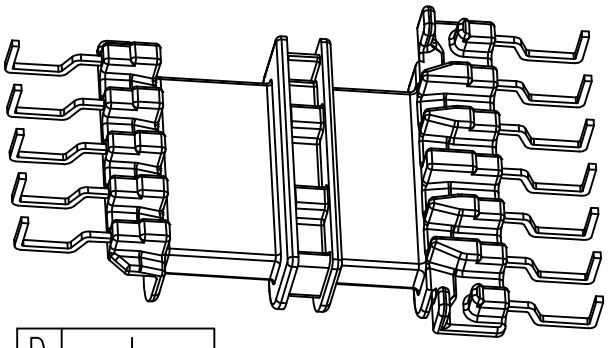

D	L
L1	4.50±0.3
L2	3.50±0.3

PM 9820
T375 HF

REV.	REVISIONS REC.	DATE	REV.	REVISIONS REC.	DATE
1	腳長設變	12/02-10			
2	增加腳長	10.12.03			

DRAWN & DRAFTED BY	MA LIUJIE	TOLERANCES: 0<L≦4 ±0.1; 4<L≦16 ±0.2; 16<L≦63 ±0.3; pin pitch ±0.2	ANGLE: ±1°	TITLE: L TYPE BOBBIN EEM-43/44	
CHECKED & APPROVED BY			UNIT: MM	BOBBIN MATERIAL: PHENOLIC T375HF	UL REC. UL94V-0
PIN SHINE INDUSTRIAL CO.,LTD. TEL:886-2-22990545 FAX:886-2-22990546			ORIGIN: SZ	PIN MATERIAL: CP WIRE	PIN TENSION LOAD: 1.0KG MIN
				DATE: DEC.03'2010	DRAWING NO. P-4301-1 / REV. 2