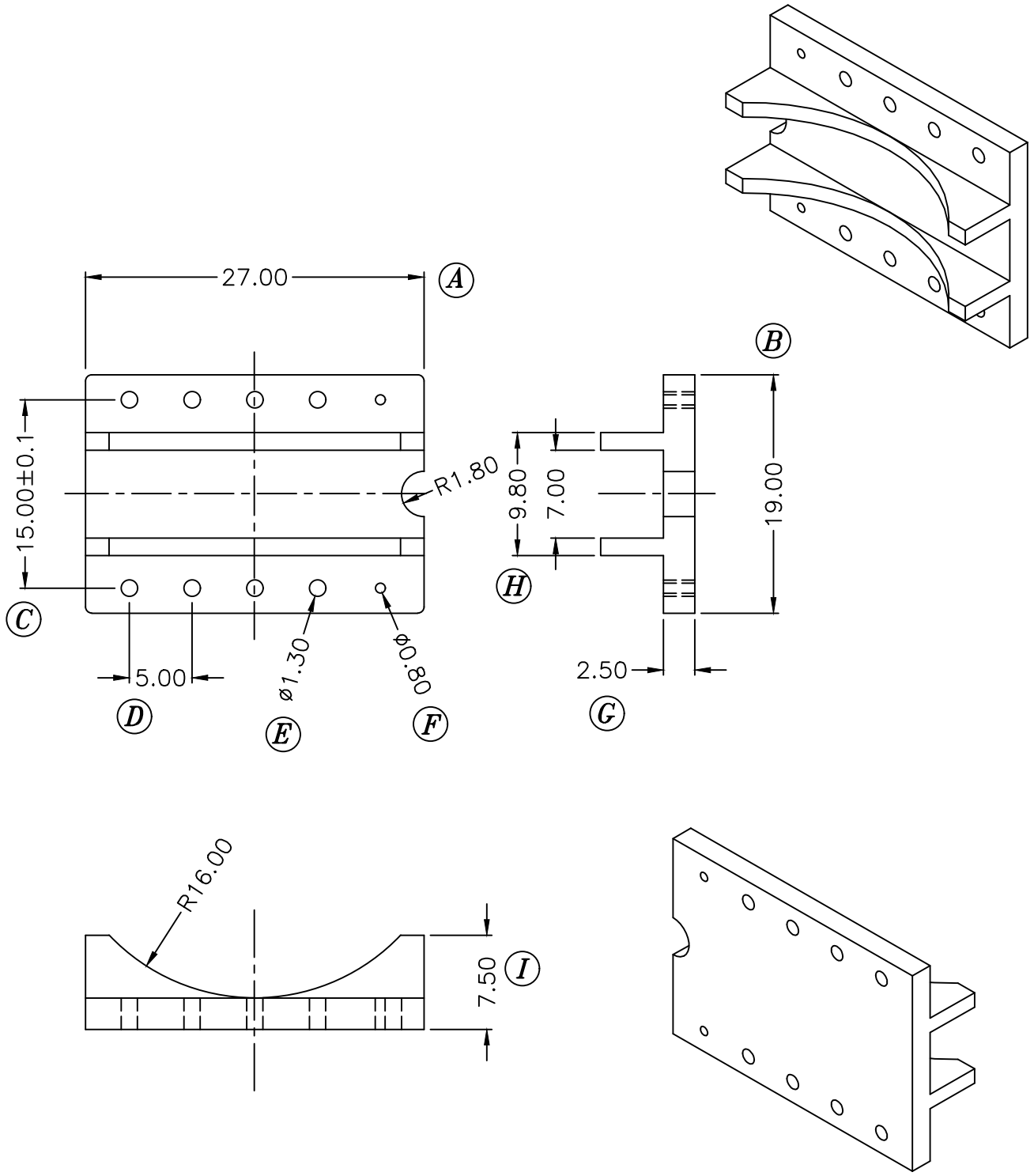

REV.	REVISIONS REC.	DATE	REV.	REVISIONS REC.	DATE

DRAWN & DRAFTED BY	XU YING	TOLERANCES	ANGLE: ±1°	TITLE: BASE	
CHECKED & APPROVED BY	JOHN RONG	0<L≤4 ±0.1 4<L≤16 ±0.2 16<L≤63 ±0.3 pin pitch ±0.2	UNIT: MM	BOBBIN MATERIAL: T375J	UL REC. UL 94V-0
PIN SHINE INDUSTRIAL CO.,LTD. TEL:886-2-22990545 FAX:886-2-22990546			ORIGIN: DG	PIN MATERIAL:	PIN TENSION LOAD:
				DATE: SEP.07 '2004	DRAWING NO. PB-039 / REV. 0