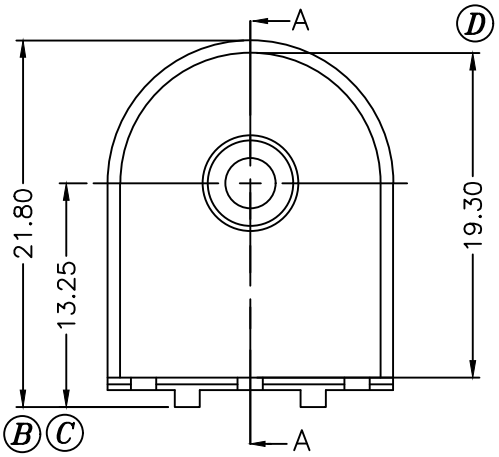

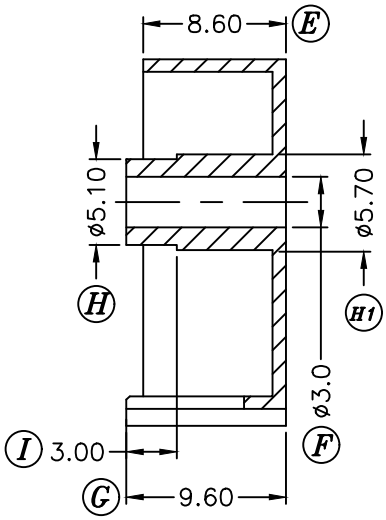

SEC. A–A

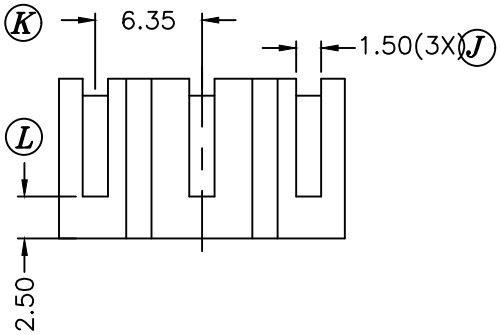

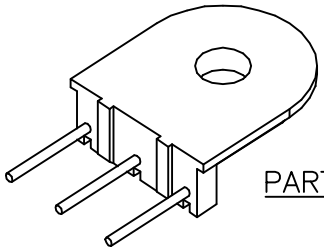

PART PB–001

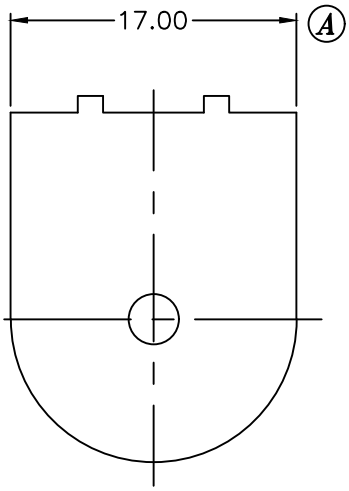

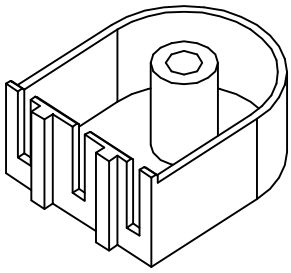

REV.	REVISIONS REC.	DATE	REV.	REVISIONS REC.	DATE
1	MATERIAL: PBT 4130 CHANGE TO PET T102G30.				
2	MATERIAL RECHANGE TO PBT 4130.	01.11.22			

DRAWN & DRAFTED BY	JANSON GONG	TOLERANCES	ANGLE: ±1°	TITLE: COVER 21.8X17X9.6	
CHECKED & APPROVED BY	JOHN RONG	0<L≤4 ±0.1 4<L≤16 ±0.2 16<L≤63 ±0.3 — pin pitch ±0.2	UNIT: MM	BOBBIN MATERIAL: PBT 4130	UL REC. UL 94V–0
PIN SHINE INDUSTRIAL CO.,LTD.			ORIGIN: DG	PIN MATERIAL:	PIN TENSION LOAD:
TEL:886–2–22990545	FAX:886–2–22990546			DATE: NOV.22'2001 — DRAWING NO. C–001	REV. 2