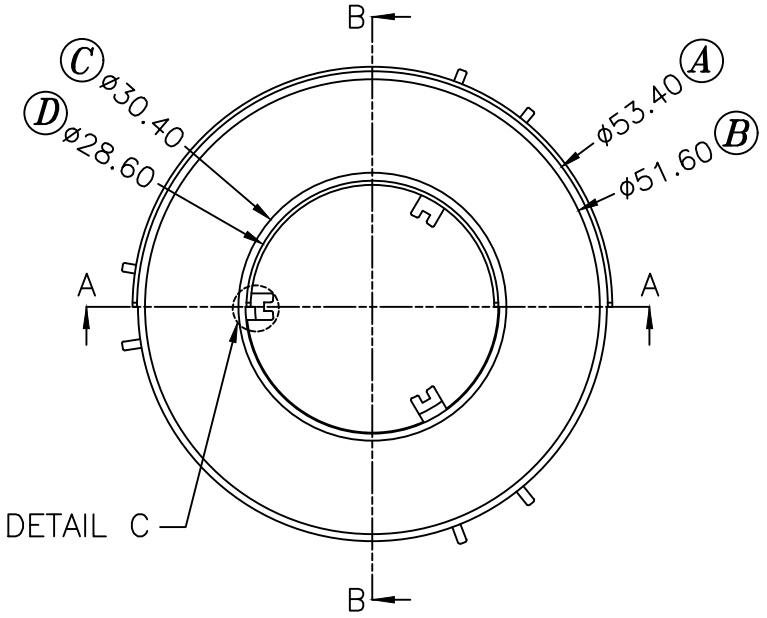

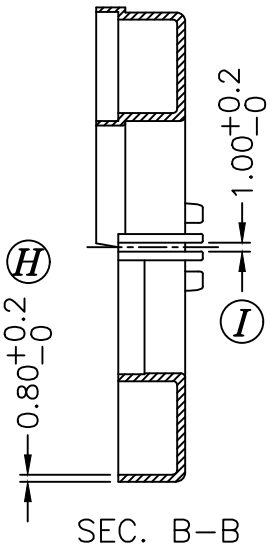

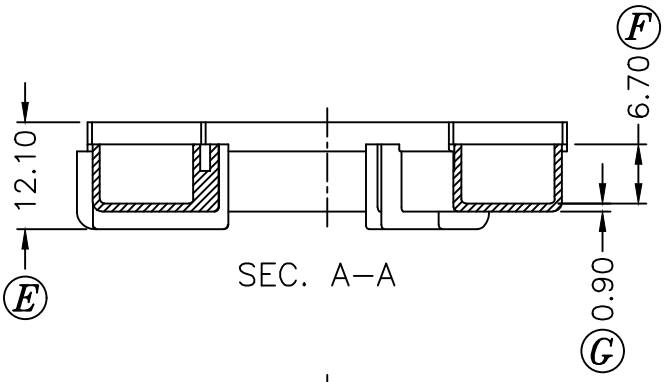

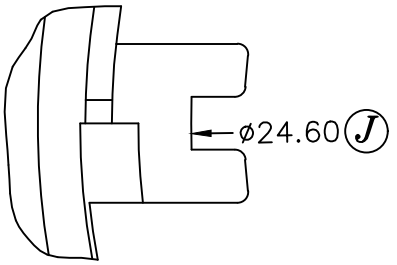

DET C
SCA: 6:1

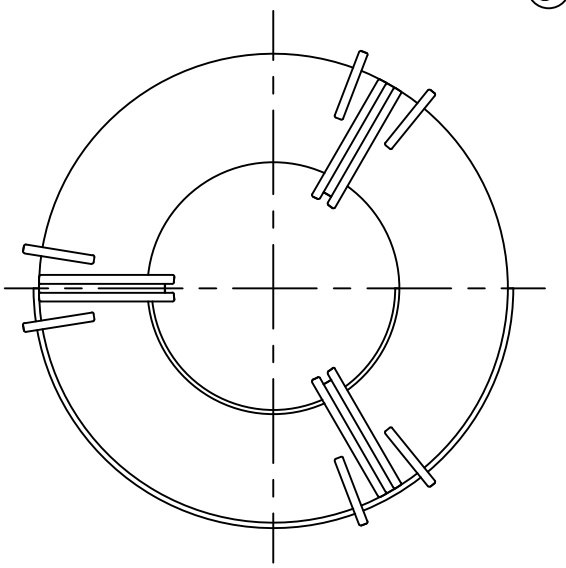

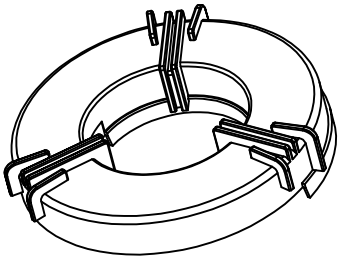

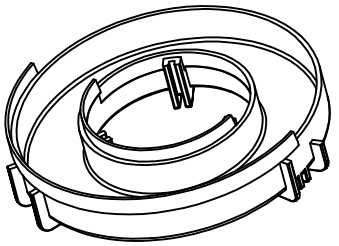

REV.	REVISIONS REC.	DATE	REV.	REVISIONS REC.	DATE

DRAWN & DRAFTED BY	GU JINJU	TOLERANCES: 0<L≤4 ±0.1; 4<L≤16 ±0.2; 16<L≤63 ±0.3; pin pitch ±0.2	ANGLE: ±1°	TITLE: COVER TOR51*31*13	
CHECKED & APPROVED BY			UNIT: MM	MATERIAL: PBT 1403G6	UL REC. UL 94V−0
PIN SHINE INDUSTRIAL CO.,LTD. TEL:886−2−22990545 FAX:886−2−22990546			ORIGIN: SZ	PIN MATERIAL: /	PIN TENSION LOAD: /
				DATE: OCT.09 '2007	DRAWING NO. C−223 / REV. 0