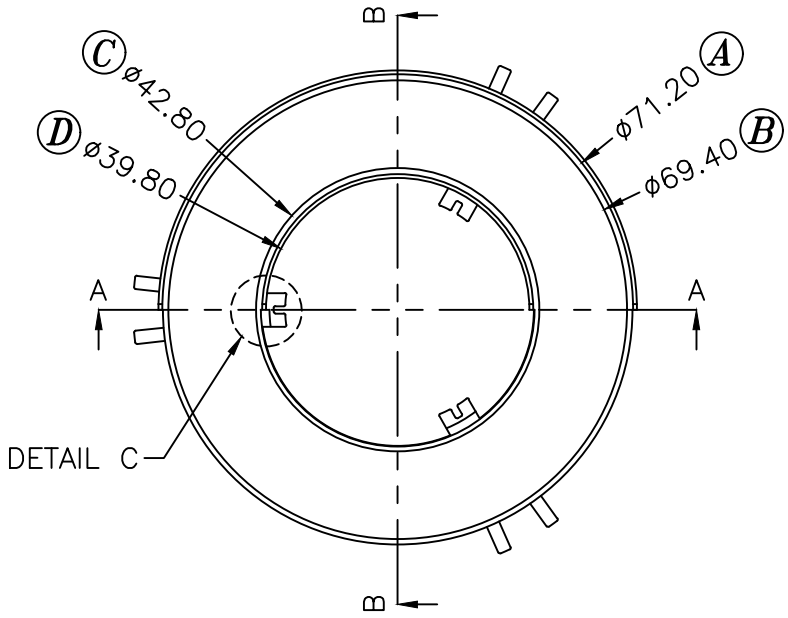

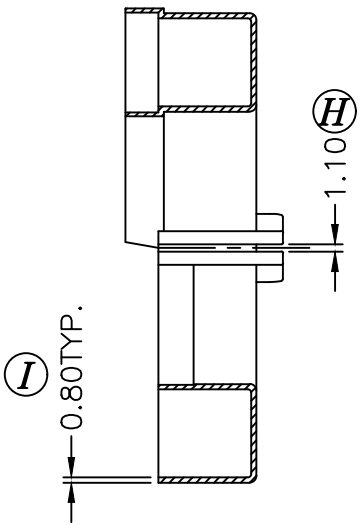

SEC B–B

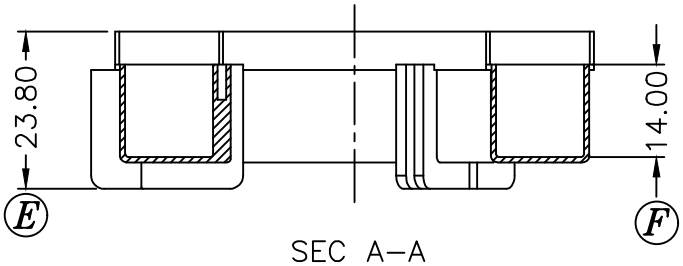

SEC A–A

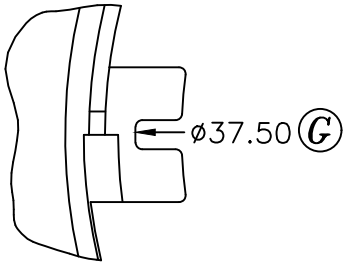

DETAIL C
SCALE 4:1

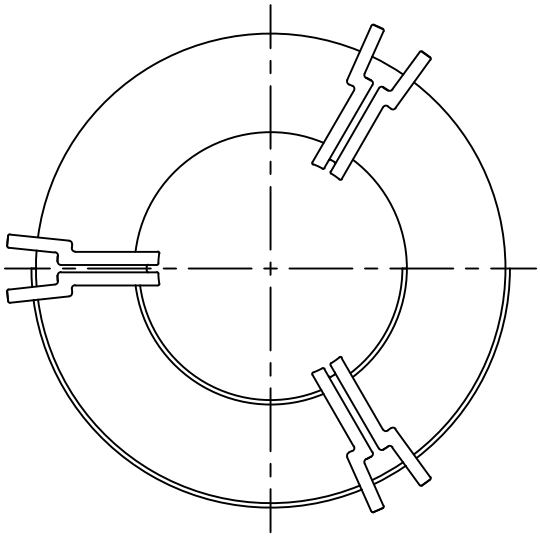

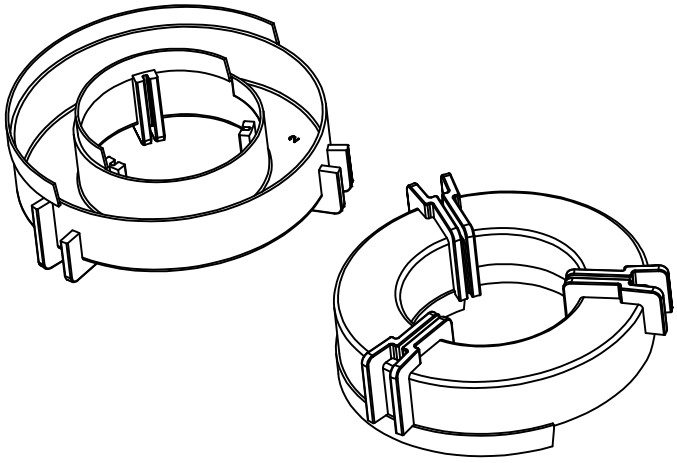

REV.	REVISIONS REC.	DATE	REV.	REVISIONS REC.	DATE

DRAWN & DRAFTED BY	HOU YI MIN	TOLERANCES: 0<L≤4 ±0.1; 4<L≤16 ±0.2; 16<L≤63 ±0.3; pin pitch ±0.2	ANGLE: ±1°	TITLE: COVER TOR68X44X27.5	
CHECKED & APPROVED BY			UNIT: MM	MATERIAL: PBT 1403G6	UL REC. UL 94V–0
PIN SHINE INDUSTRIAL CO.,LTD. TEL:886–2–22990545 FAX:886–2–22990546			ORIGIN: SZ	PIN MATERIAL: /	PIN TENSION LOAD: /
				DATE: OCT.11 '2007	DRAWING NO. C–225–1 / REV. 0