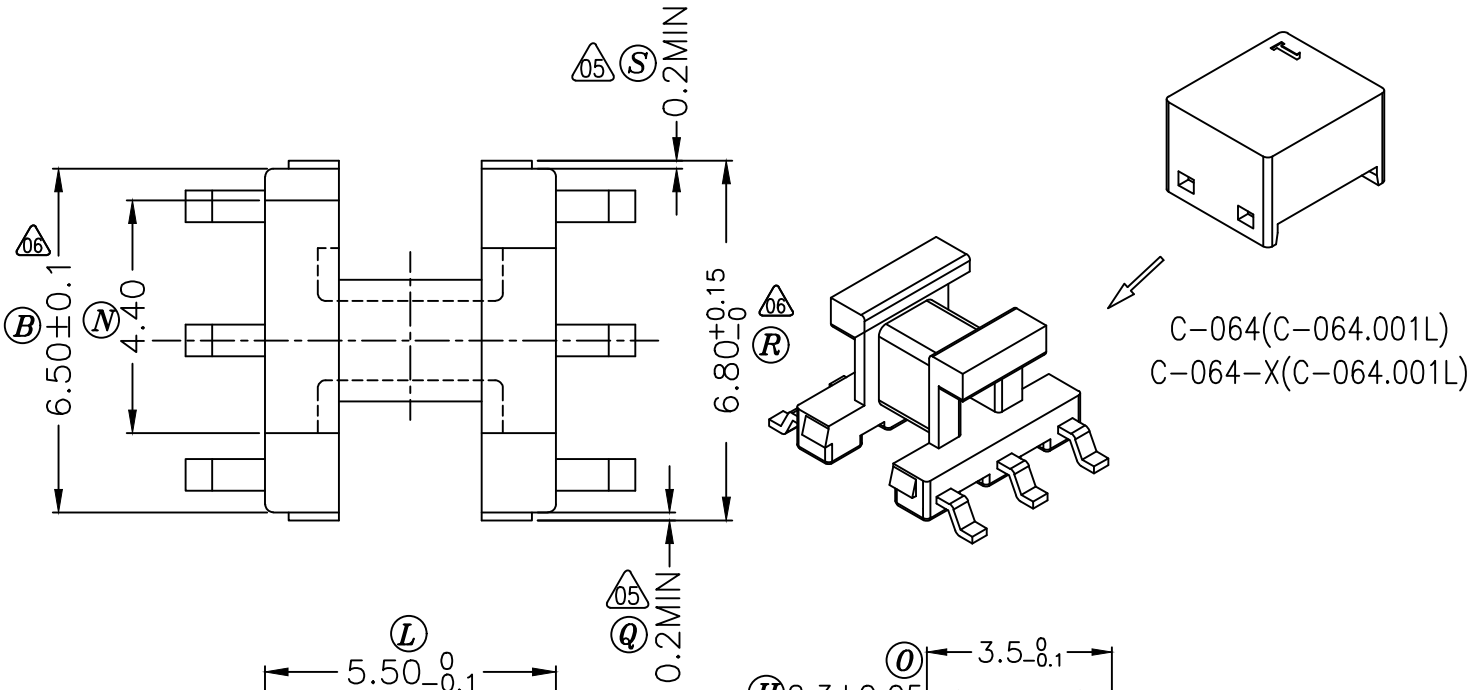

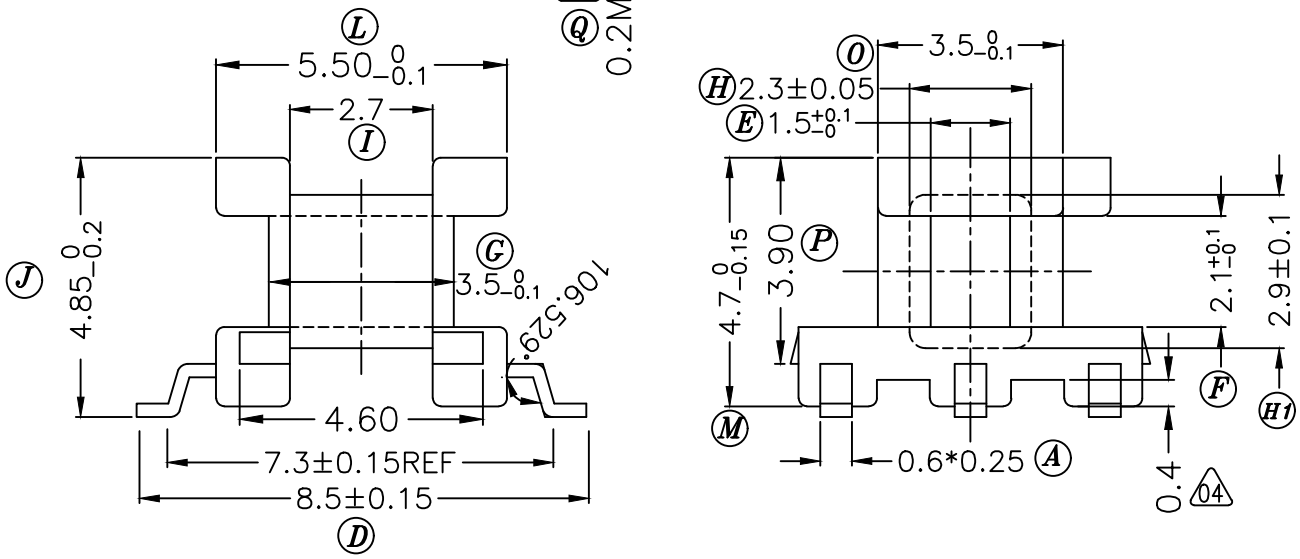

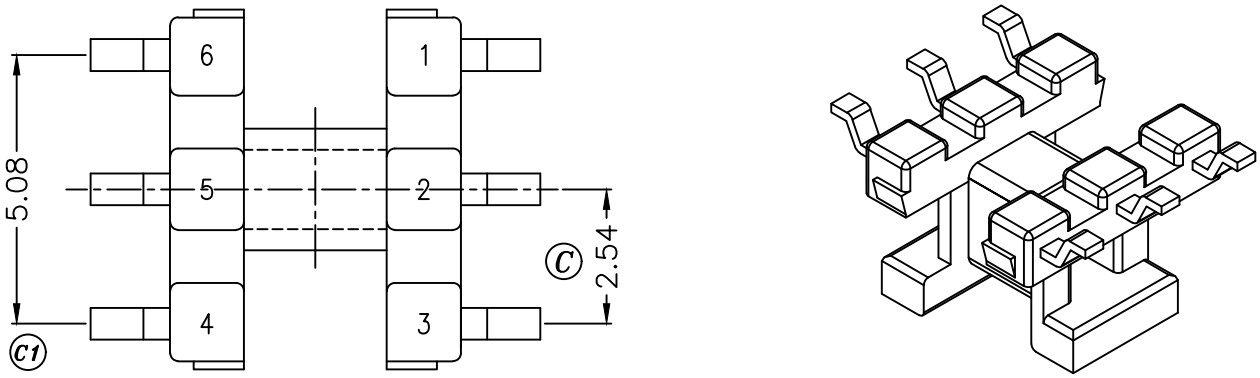

B-064.101L (B-064)

S-601-4是在S-601的基础上新增LCP R8240 BK 材质生产.

REV.	REVISIONS REC.	DATE	REV.	REVISIONS REC.	DATE

DRAWN & DRAFTED BY	GUAN XIN HAI	TOLERANCES: 0<L≤4 ±0.1; 4<L≤16 ±0.2; 16<L≤63 ±0.3; pin pitch ±0.05	ANGLE: ±1°	TITLE: SMD BOBBIN EE-6.3	
CHECKED & APPROVED BY			UNIT: MM	BOBBIN MATERIAL: LCP R8240 BK	UL REC. UL 94V-0
PIN SHINE INDUSTRIAL CO.,LTD. TEL:886-2-22990545 FAX:886-2-22990546			ORIGIN: DG	PIN MATERIAL: PHOSPHOR BRONZE	PIN TENSION LOAD: 1.0KG MIN
				DATE: JUL.27 '2002	DRAWING NO. S-601-4 / REV. 0