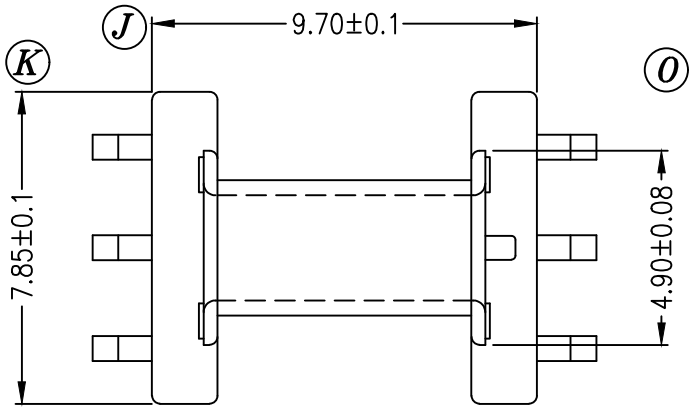

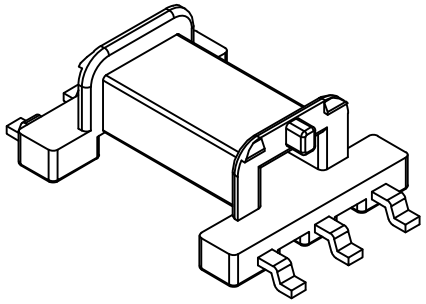

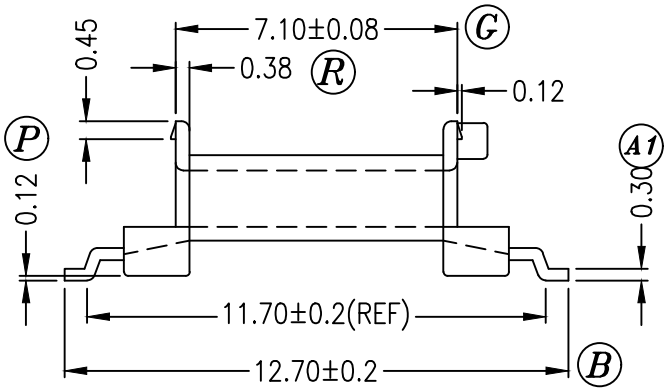

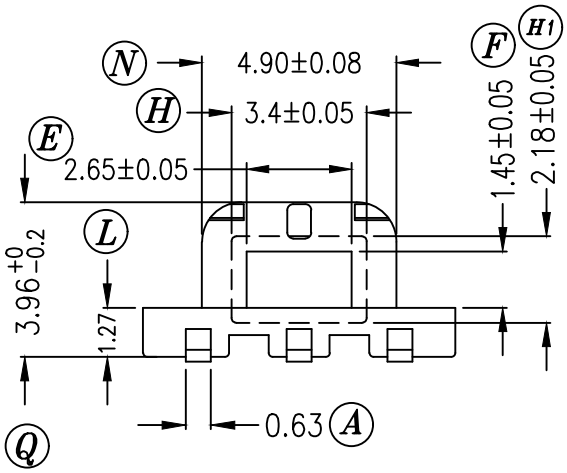

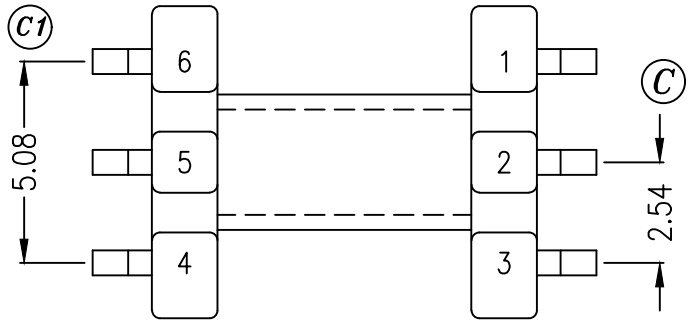

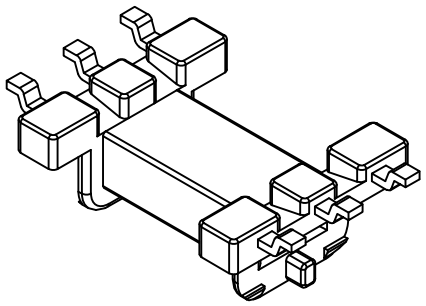

B-055.101L (B-055)

REV.	REVISIONS REC.	DATE	REV.	REVISIONS REC.	DATE

DRAWN & DRAFTED BY	ZHANG ZHI QIANG	TOLERANCES: 0<L≤4 ±0.1; 4<L≤16 ±0.2; 16<L≤63 ±0.3; pin pitch ±0.2	ANGLE: ±1°	TITLE: SMD BOBBIN ED-8	
CHECKED & APPROVED BY			UNIT: MM	BOBBIN MATERIAL: LCP E4008	UL REC. UL 94V-0
PIN SHINE INDUSTRIAL CO.,LTD. TEL:886-2-22990545 FAX:886-2-22990546			ORIGIN: DG	PIN MATERIAL: PHOSPHOR BRONZE	PIN TENSION LOAD: 1.0 KG MIN
				DATE: JUL.30 '2002 / DRAWING NO. S-812	REV. 0