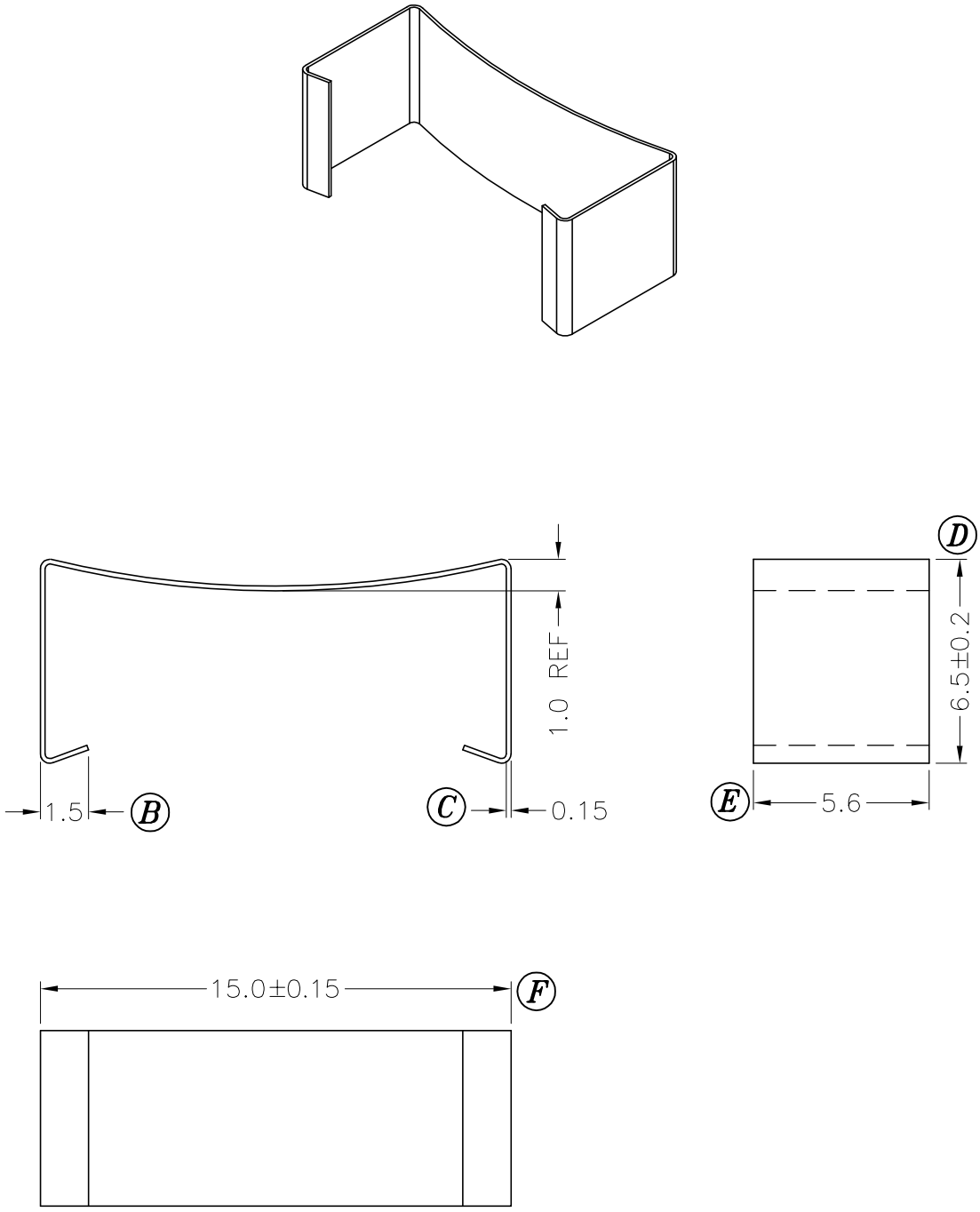

C-010.001S(B-010C)

REV.	REVISIONS REC.	DATE.	REV.	REVISIONS REC.	DATE.
1	CANCEL (A);				
2	CHANGE THE TOLERANCE OF (E) TO ±0.1	01,12'04			

DRAWN & DRAFTED BY	SADY WANG	TOLERANCES	ANGLE: ±1°	TITLE: CLIP ER-14.5/6	
CHECKED &	JOHN RONG	0<L≦4 ±0.1 4<L≦16 ±0.2 16<L≦63 ±0.3 pin pitch	UNIT: MM	CLIP MATERIAL: STAINLESS STEEL	UL REC. —
PIN SHINE INDUSTRIAL CO.,LTD. TEL:886-2-22990545 FAX:886-2-22990546			ORIGIN: DG	PIN MATERIAL: —	PIN TENSION LOAD: —
				DATE: JAN,12 '2004	DRAWING NO. C-012 / REV. 2